TC7

series

Product Segments

- **Comfort Motion**
- **Ergo Motion**

Number of actuators	1~2
Maximum output	28V DC, 1.2A
Color	black or grey
Certificate	EMC and RoHS

Specially designed for 2 actuators with synchronized movement

Drawing

Standard Dimension

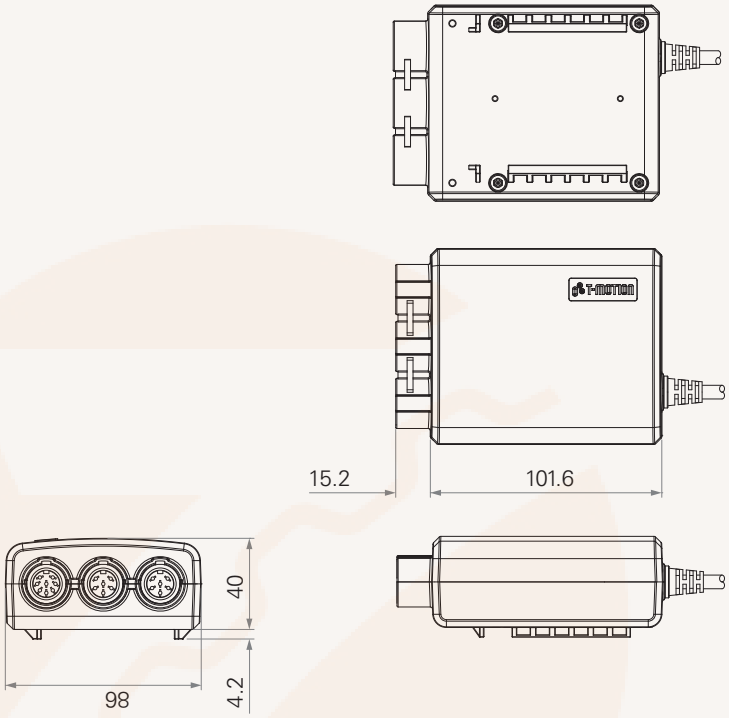

Terms of Use

The user is responsible for determining the suitability of TiMOTION products for a specific application.

Due to continuous development in order to improve our products, TiMOTION products are subject to frequent modifications and changes without prior notice.

TiMOTION reserves the right to discontinue the sale of any products displayed on its website or listed in its catalogue or other written materials drawn up by TiMOTION.

TC7 Ordering Key

TiMOTION

TC7

Version: 20130801-C

	Number of Actuators	1 = 1	2 = 2
	Color	1 = Black	2 = Grey (Pantone 428C)
	Cable Length	1 = Straight, 1000mm	A = Customized
	Fixation	1 = On the actuator	2 = On the bracket